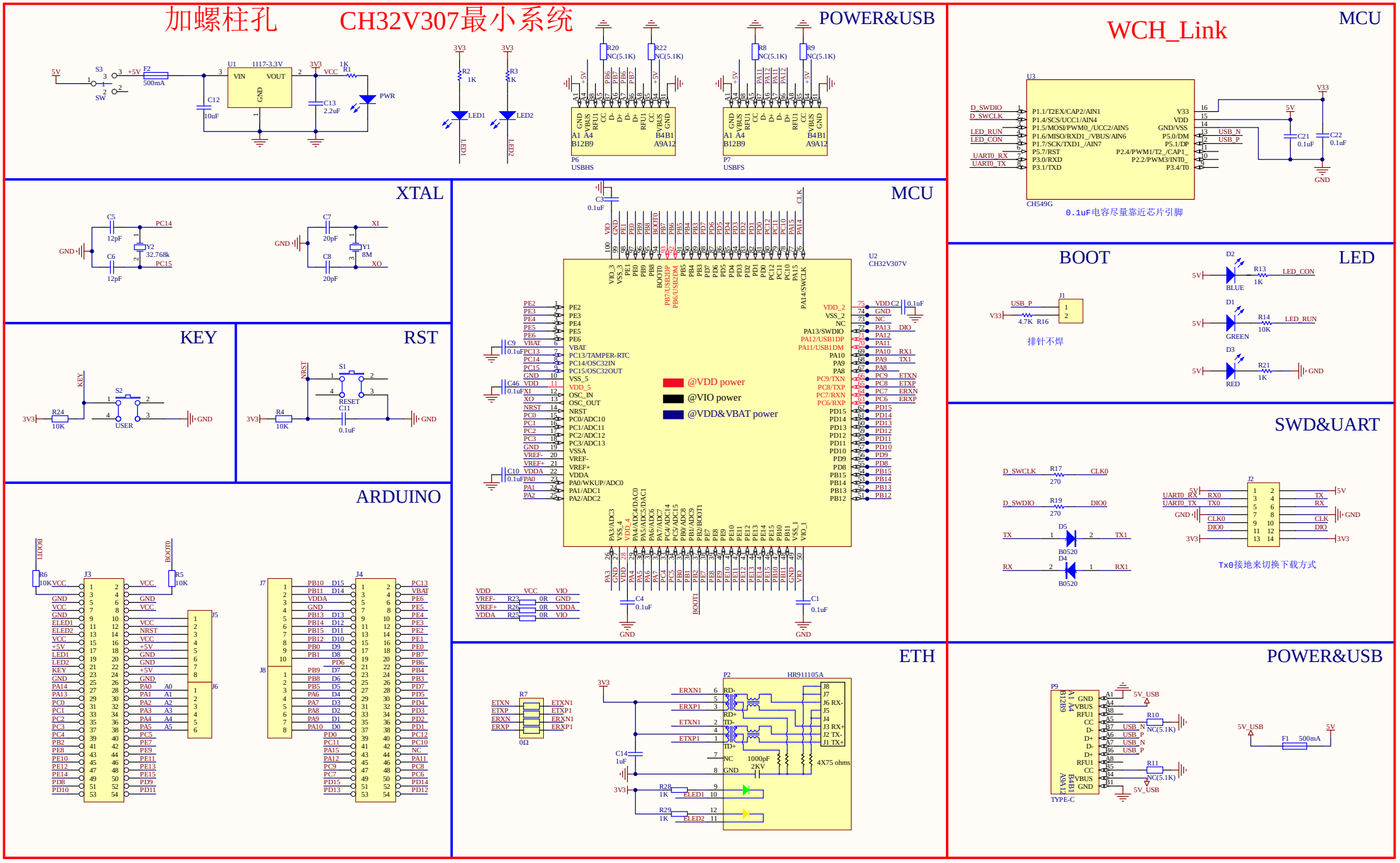
加螺柱孔
CH32V307最小系统
POWER&USB
MCU
WCH_Link
XTAL
MCU
BOOT
LED
KEY
RST
SWD&UART
ARDUINO
ETH
POWER&USB
0.1uF电容尽量靠近芯片引脚
排针不焊
Tx0接地来切换下载方式
@VDD power
@VIO power
@VDD&VBAT power

CH32V307/305/303R最小系统

POWER&USB

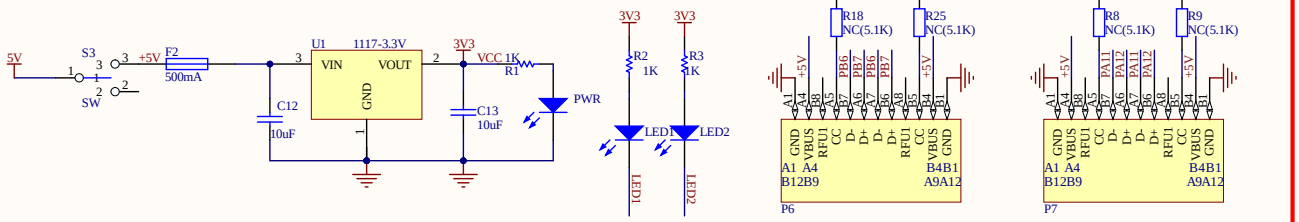

WCH_Link

MCU

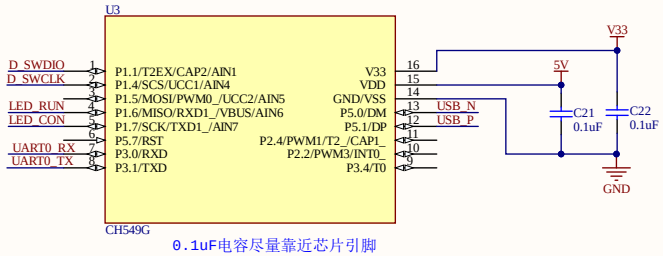

XTAL

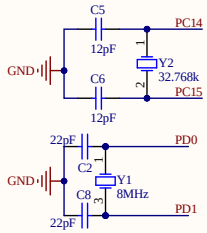

MCU

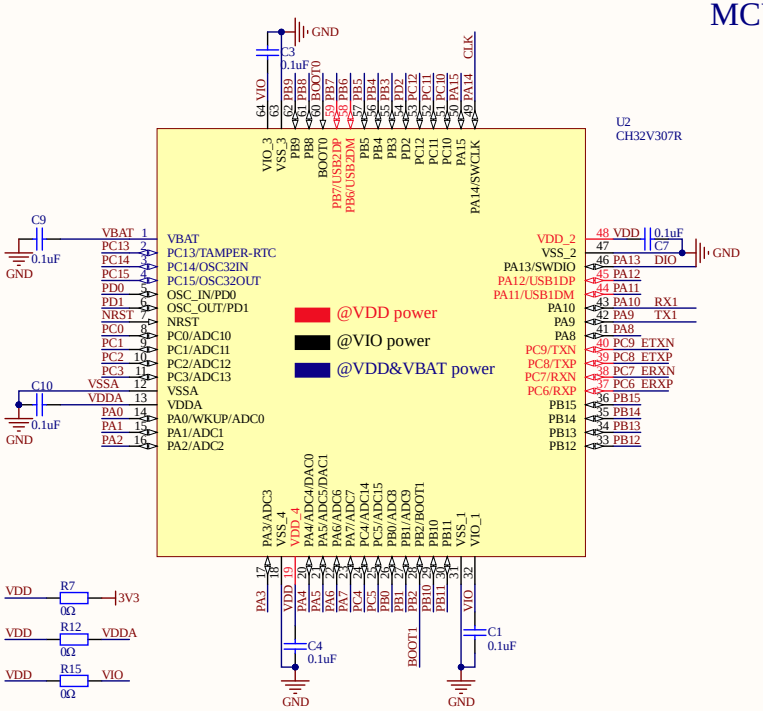

BOOT

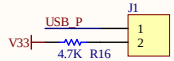

排针不焊

LED

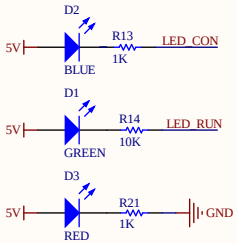

RST

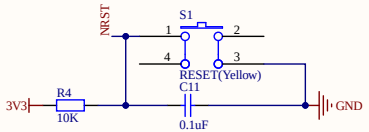

SWD&UART

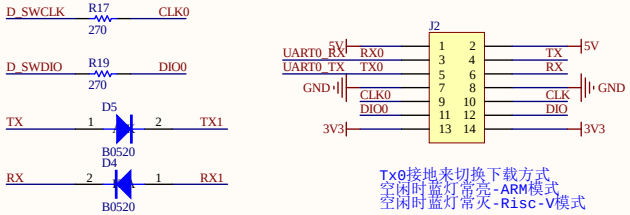

KEY

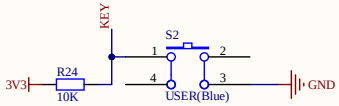

ARDUINO

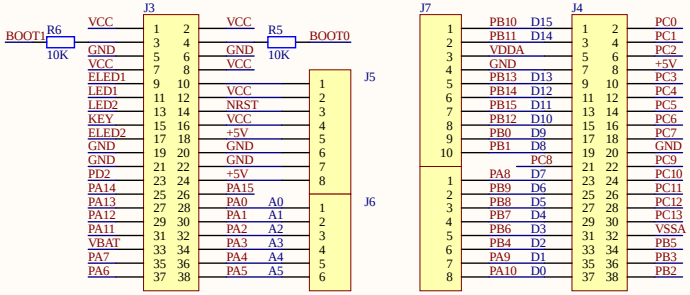

ETH

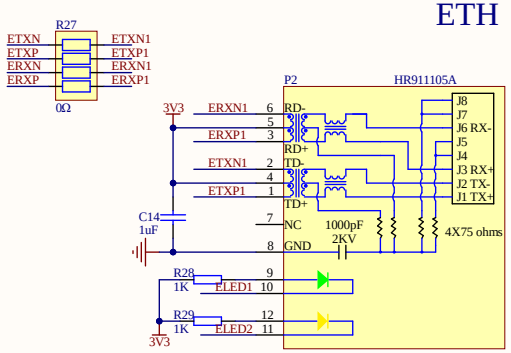

POWER&USB

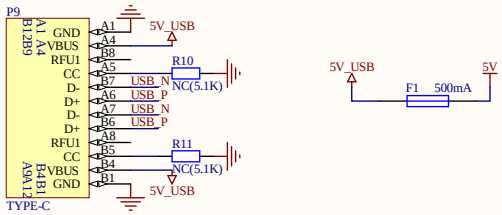

CH32V307/305/303R最小系统

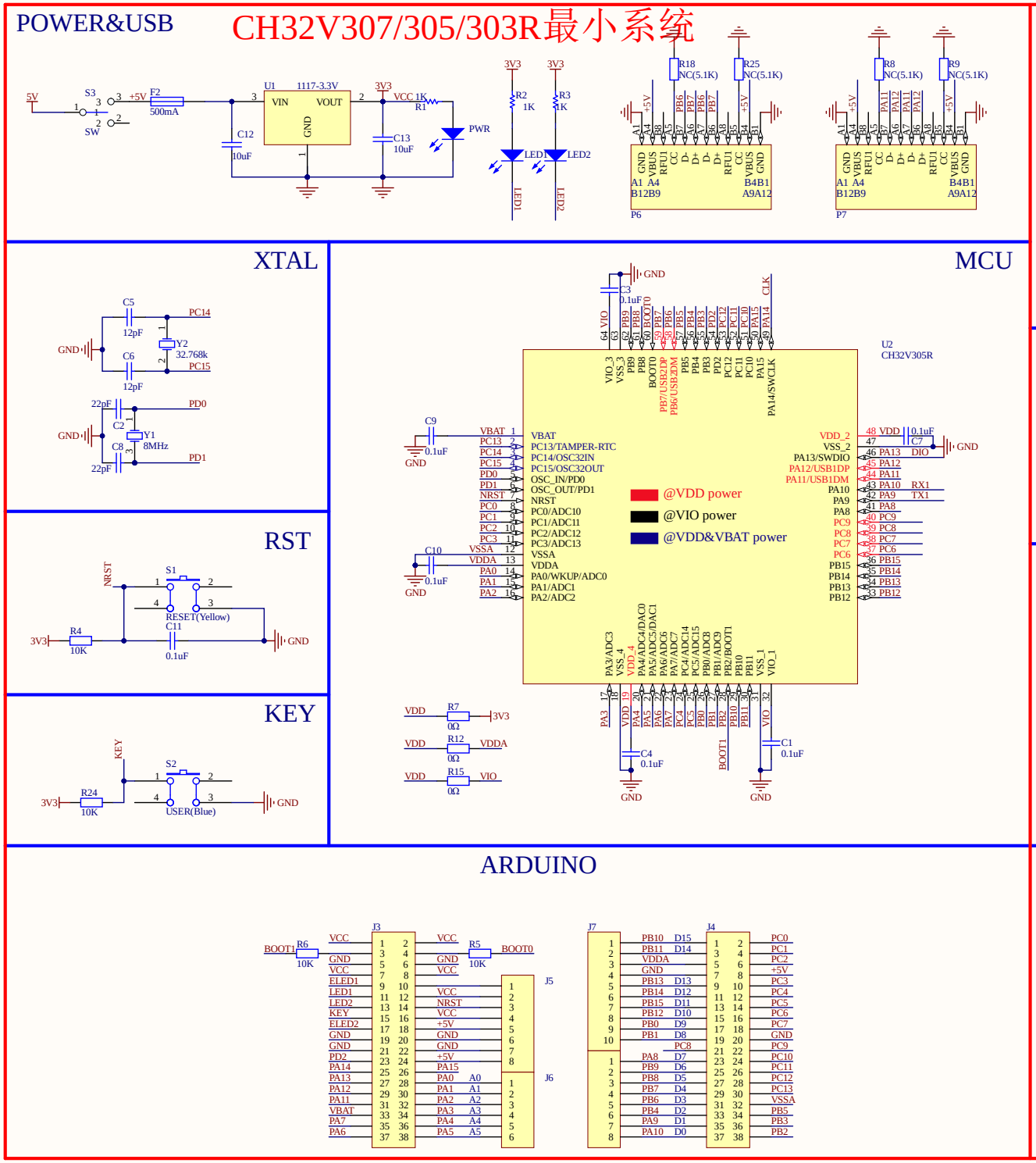

WCH_Link

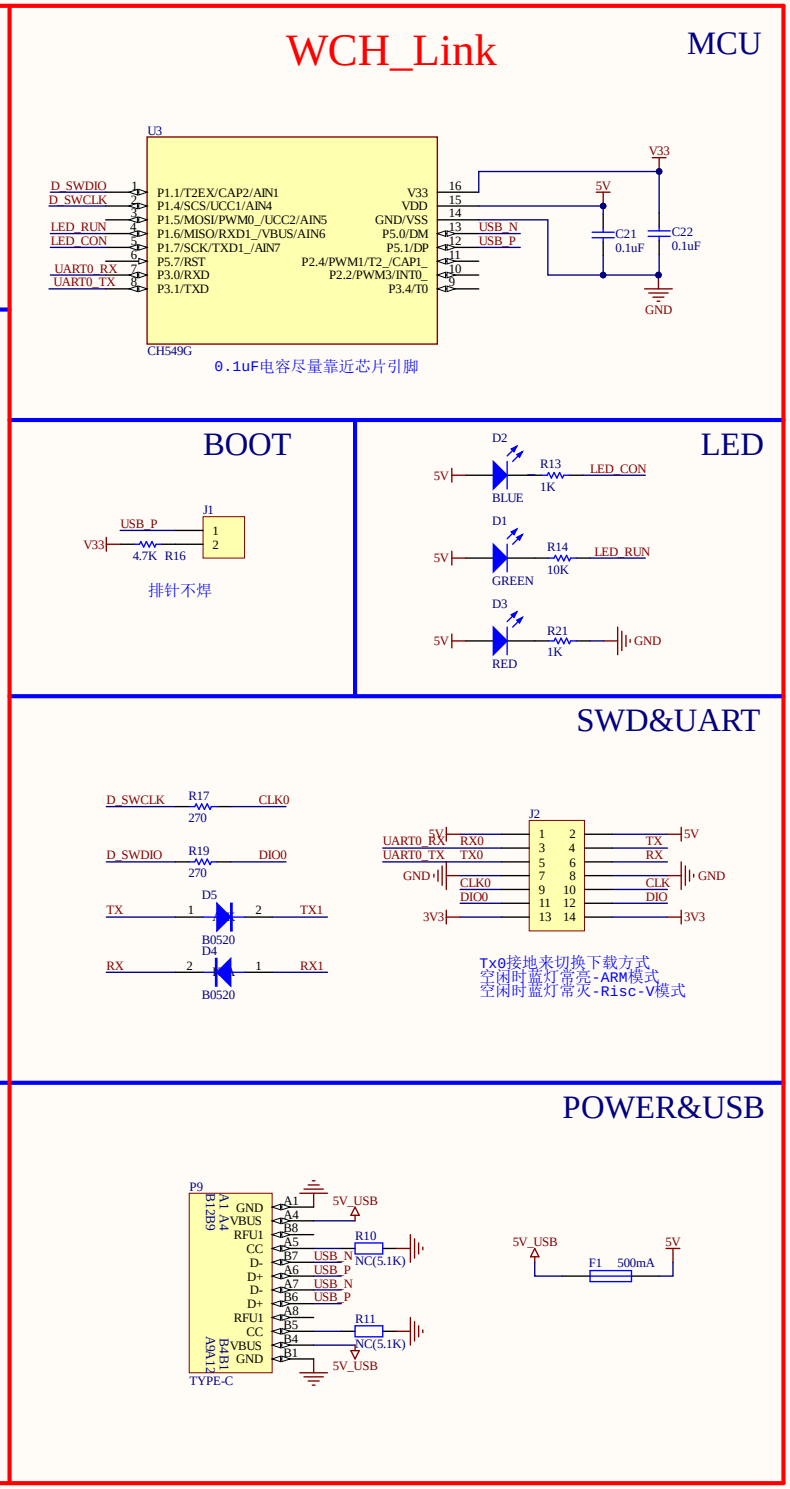

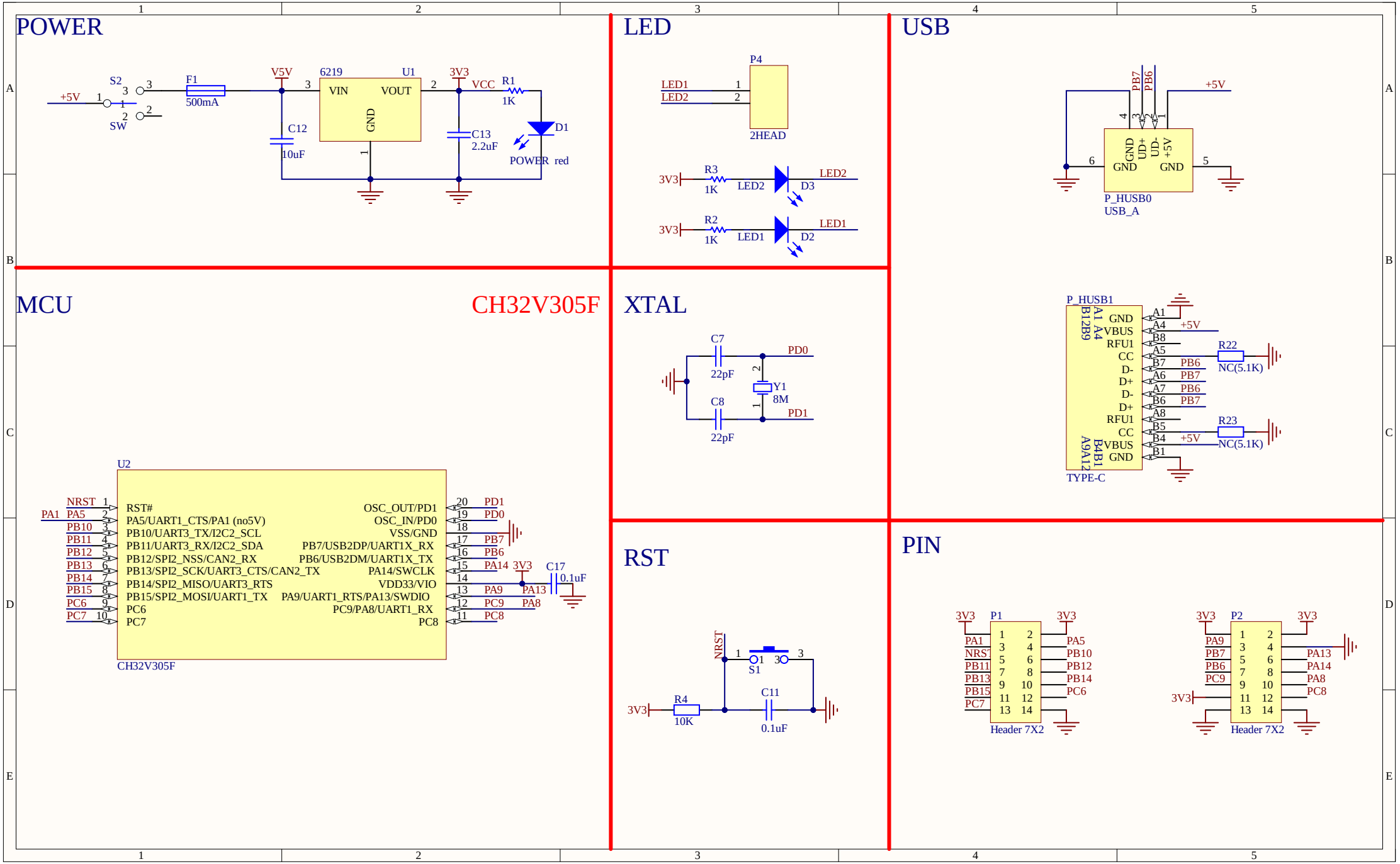
POWER
+5V
S2
SW
F1
500mA
V5V
6219
U1
VIN
VOUT
GND
C12
10uF
3V3
VCC
R1
1K
C13
2.2uF
D1
POWER red
LED
P4
LED1
LED2
2HEAD
3V3
R3
1K
LED2
D3
R2
1K
LED1
D2
USB
PB7
PB6
+5V
GND
UD+
UD-
+5V
P_HUSB0
USB_A
P_HUSB1
TYPE-C
R22
NC(5.1K)
R23
NC(5.1K)
MCU
CH32V305F
U2
NRST
PA1
PA5
PB10
PB11
PB12
PB13
PB14
PB15
PC6
PC7
RST#
PA5/UART1_CTS/PA1 (no5V)
PB10/UART3_TX/I2C2_SCL
PB11/UART3_RX/I2C2_SDA
PB12/SPI2_NSS/CAN2_RX
PB13/SPI2_SCK/UART3_CTS/CAN2_TX
PB14/SPI2_MISO/UART3_RTS
PB15/SPI2_MOSI/UART1_TX
PC6
PC7
OSC_OUT/PD1
OSC_IN/PD0
VSS/GND
PB7/USB2DP/UART1X_RX
PB6/USB2DM/UART1X_TX
PA14/SWCLK
VDD33/VIO
PA9/UART1_RTS/PA13/SWDIO
PC9/PA8/UART1_RX
PC8
PD1
PD0
PB7
PB6
PA14
PA13
PA9
PC9
PA8
PC8
C17
0.1uF
XTAL
C7
22pF
PD0
Y1
8M
C8
22pF
PD1
RST
NRST
S1
R4
10K
C11
0.1uF
PIN
P1
Header 7X2
P2
Header 7X2

CH32V307/305/303R最小系统

POWER&USB

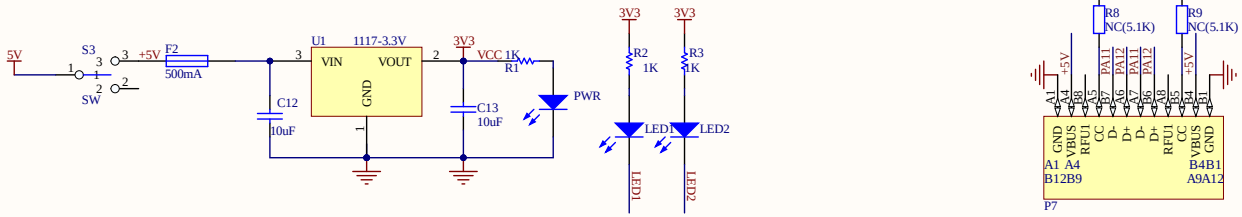

WCH_Link

MCU

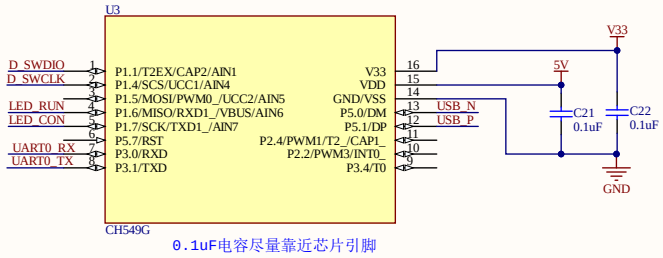

0.1uF电容尽量靠近芯片引脚

XTAL

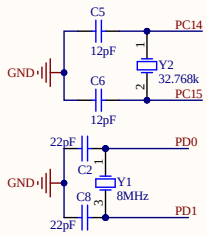

MCU

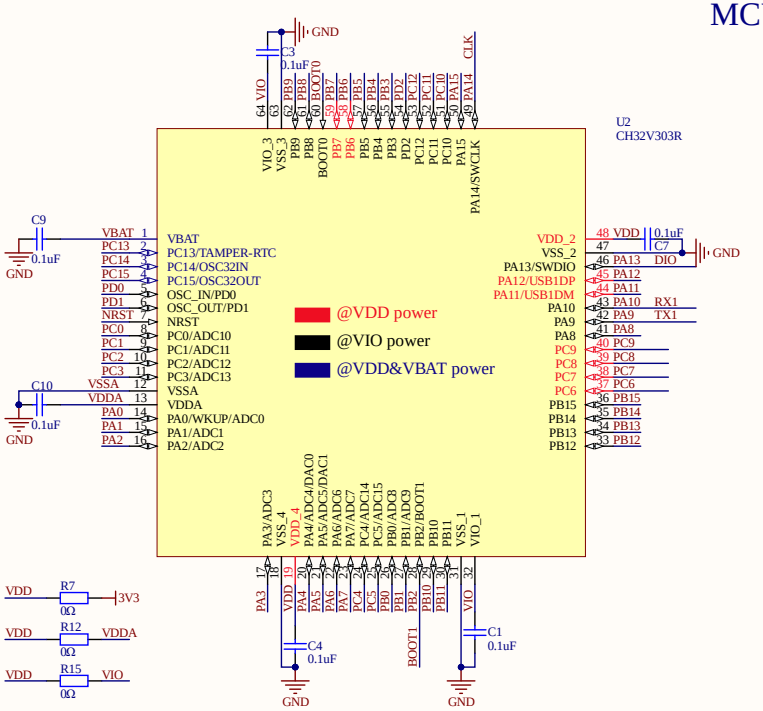

BOOT

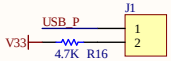

排针不焊

LED

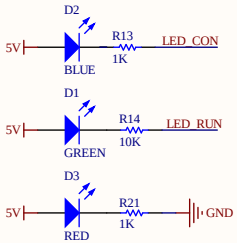

RST

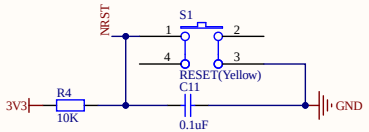

KEY

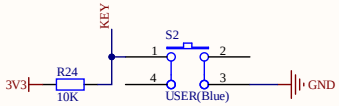

SWD&UART

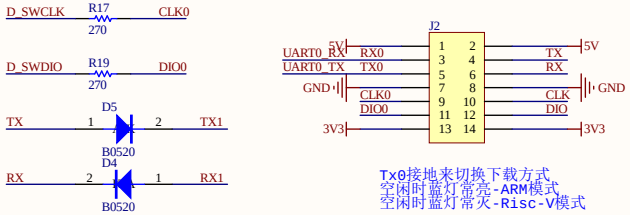

Tx0接地来切换下载方式
空闲时蓝灯常亮-ARM模式
空闲时蓝灯常灭-Risc-V模式

ARDUINO

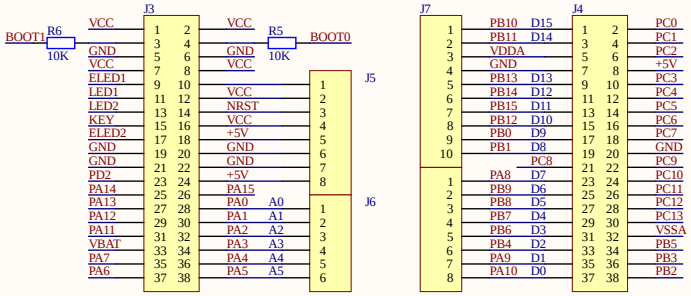

POWER&USB

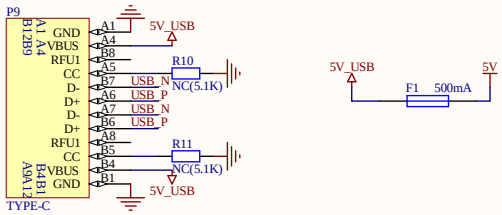

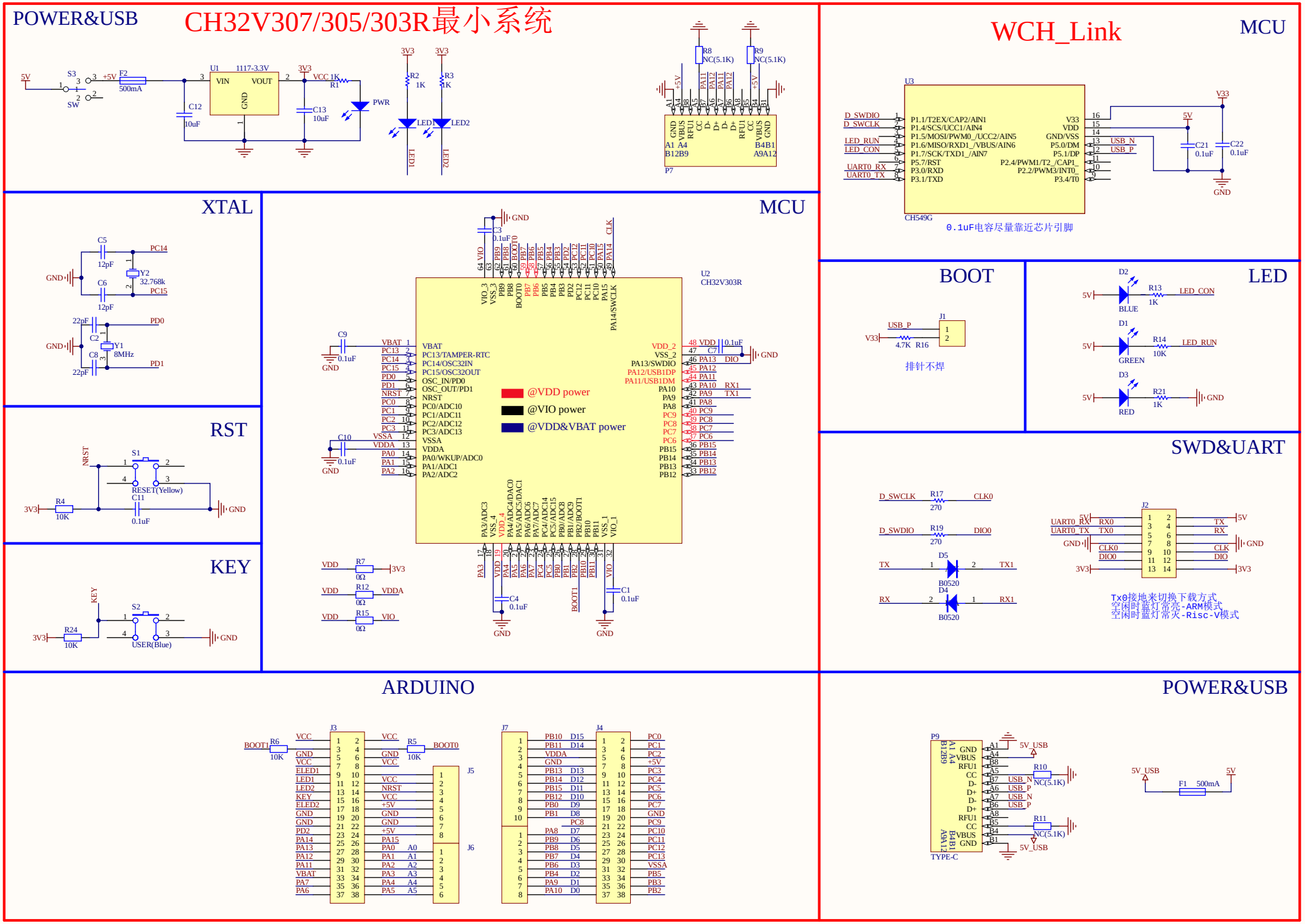
POWER&USB
CH32V307/305/303R最小系统
U1 1117-3.3V
VIN VOUT GND
5V S3 SW +5V F2 500mA
C12 10uF
3V3 VCC 1K R1 PWR
C13 10uF
3V3 R2 1K R3 1K
LED1 LED2
R8 NC(5.1K) R9 NC(5.1K)
P7
WCH_Link
MCU
U3 CH549G
P1.1/T2EX/CAP2/AIN1
P1.4/SCS/UCC1/AIN4
P1.5/MOSI/PWM0_/UCC2/AIN5
P1.6/MISO/RXD1_/VBUS/AIN6
P1.7/SCK/TXD1_/AIN7
P5.7/RST
P3.0/RXD
P3.1/TXD
V33 VDD GND/VSS P5.0/DM P5.1/DP
P2.4/PWM1/T2_/CAP1_
P2.2/PWM3/INT0_
P3.4/T0
D_SWDIO D_SWCLK LED_RUN LED_CON UART0_RX UART0_TX
USB_N USB_P
C21 0.1uF C22 0.1uF
0.1uF电容尽量靠近芯片引脚
XTAL
C5 12pF PC14
C6 12pF PC15
Y2 32.768k
22pF C2 PD0
C8 22pF PD1
Y1 8MHz
MCU
U2 CH32V303R
C3 0.1uF
VIO_3 VSS_3 PB9 PB8 BOOT0 PB7 PB6 PB5 PB4 PB3 PD2 PC12 PC11 PC10 PA15 PA14
PA14/SWCLK
VBAT PC13/TAMPER-RTC PC14/OSC32IN PC15/OSC32OUT OSC_IN/PD0 OSC_OUT/PD1 NRST PC0/ADC10 PC1/ADC11 PC2/ADC12 PC3/ADC13 VSSA VDDA PA0/WKUP/ADC0 PA1/ADC1 PA2/ADC2
VDD_2 VSS_2 PA13/SWDIO PA12/USB1DP PA11/USB1DM PA10 PA9 PA8 PC9 PC8 PC7 PC6 PB15 PB14 PB13 PB12
C9 0.1uF C10 0.1uF
@VDD power
@VIO power
@VDD&VBAT power
PA3/ADC3 VSS_4 VDD_4 PA4/ADC4/DAC0 PA5/ADC5/DAC1 PA6/ADC6 PA7/ADC7 PC4/ADC14 PC5/ADC15 PB0/ADC8 PB1/ADC9 PB2/BOOT1 PB10 PB11 VSS_1 VIO_1
VDD R7 0Ω 3V3
VDD R12 0Ω VDDA
VDD R15 0Ω VIO
C4 0.1uF C1 0.1uF
BOOT
USB_P V33 4.7K R16 J1
排针不焊
LED
D2 BLUE R13 1K LED_CON
D1 GREEN R14 10K LED_RUN
D3 RED R21 1K
RST
NRST S1 RESET(Yellow) C11 0.1uF R4 10K 3V3
KEY
KEY S2 USER(Blue) R24 10K 3V3
SWD&UART
D_SWCLK R17 270 CLK0
D_SWDIO R19 270 DIO0
TX D5 B0520 TX1
RX D4 B0520 RX1
J2
UART0_RX RX0 UART0_TX TX0 CLK0 DIO0
TX RX CLK DIO
Tx0接地来切换下载方式
空闲时蓝灯常亮-ARM模式
空闲时蓝灯常灭-Risc-V模式
ARDUINO
J3 J5 J6 J7 J4
BOOT1 R6 10K BOOT0 R5 10K
POWER&USB
P9 TYPE-C
5V_USB
R10 NC(5.1K) R11 NC(5.1K)
F1 500mA 5V

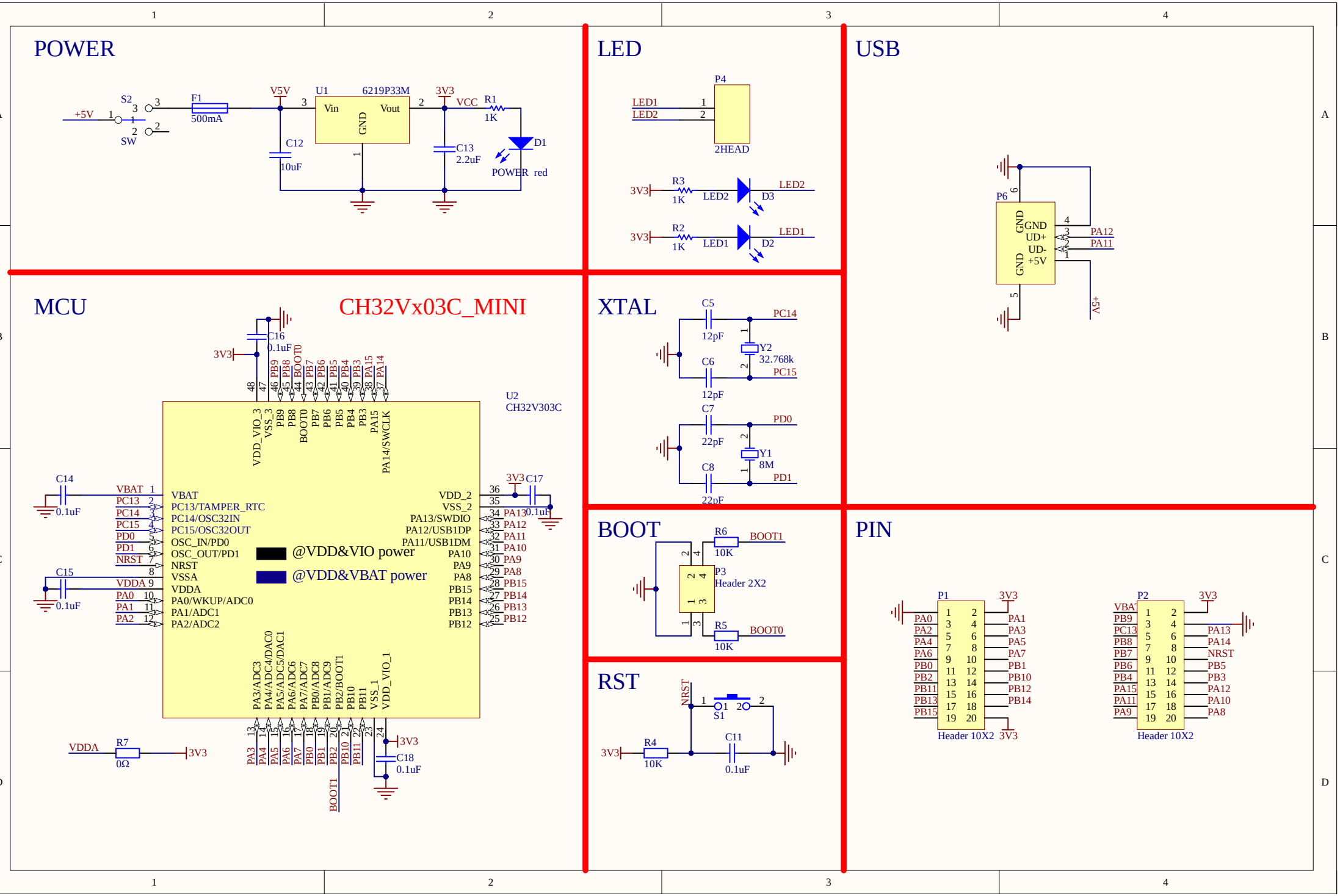
POWER
+5V
S2
SW
F1
500mA
V5V
U1
6219P33M
Vin
Vout
GND
3V3
VCC
R1
1K
C12
10uF
C13
2.2uF
D1
POWER red
LED
P4
LED1
LED2
2HEAD
3V3
R3
1K
LED2
D3
R2
1K
LED1
D2
USB
P6
GND
UD+
UD-
+5V
PA12
PA11
MCU
CH32Vx03C_MINI
U2
CH32V303C
C16
0.1uF
VDD_VIO_3
VSS_3
PB9
PB8
BOOT0
PB7
PB6
PB5
PB4
PB3
PA15
PA14/SWCLK
C14
0.1uF
C15
0.1uF
VBAT
PC13
PC14
PC15
PD0
PD1
NRST
VDDA
PA0
PA1
PA2
VBAT
PC13/TAMPER_RTC
PC14/OSC32IN
PC15/OSC32OUT
OSC_IN/PD0
OSC_OUT/PD1
NRST
VSSA
VDDA
PA0/WKUP/ADC0
PA1/ADC1
PA2/ADC2
@VDD&VIO power
@VDD&VBAT power
VDD_2
VSS_2
PA13/SWDIO
PA12/USB1DP
PA11/USB1DM
PA10
PA9
PA8
PB15
PB14
PB13
PB12
C17
0.1uF
PA3/ADC3
PA4/ADC4/DAC0
PA5/ADC5/DAC1
PA6/ADC6
PA7/ADC7
PB0/ADC8
PB1/ADC9
PB2/BOOT1
PB10
PB11
VSS_1
VDD_VIO_1
R7
0Ω
C18
0.1uF
XTAL
C5
12pF
C6
12pF
PC14
PC15
Y2
32.768k
C7
22pF
C8
22pF
PD0
PD1
Y1
8M
BOOT
R6
10K
BOOT1
P3
Header 2X2
R5
10K
BOOT0
RST
NRST
S1
R4
10K
C11
0.1uF
PIN
P1
Header 10X2
P2
Header 10X2

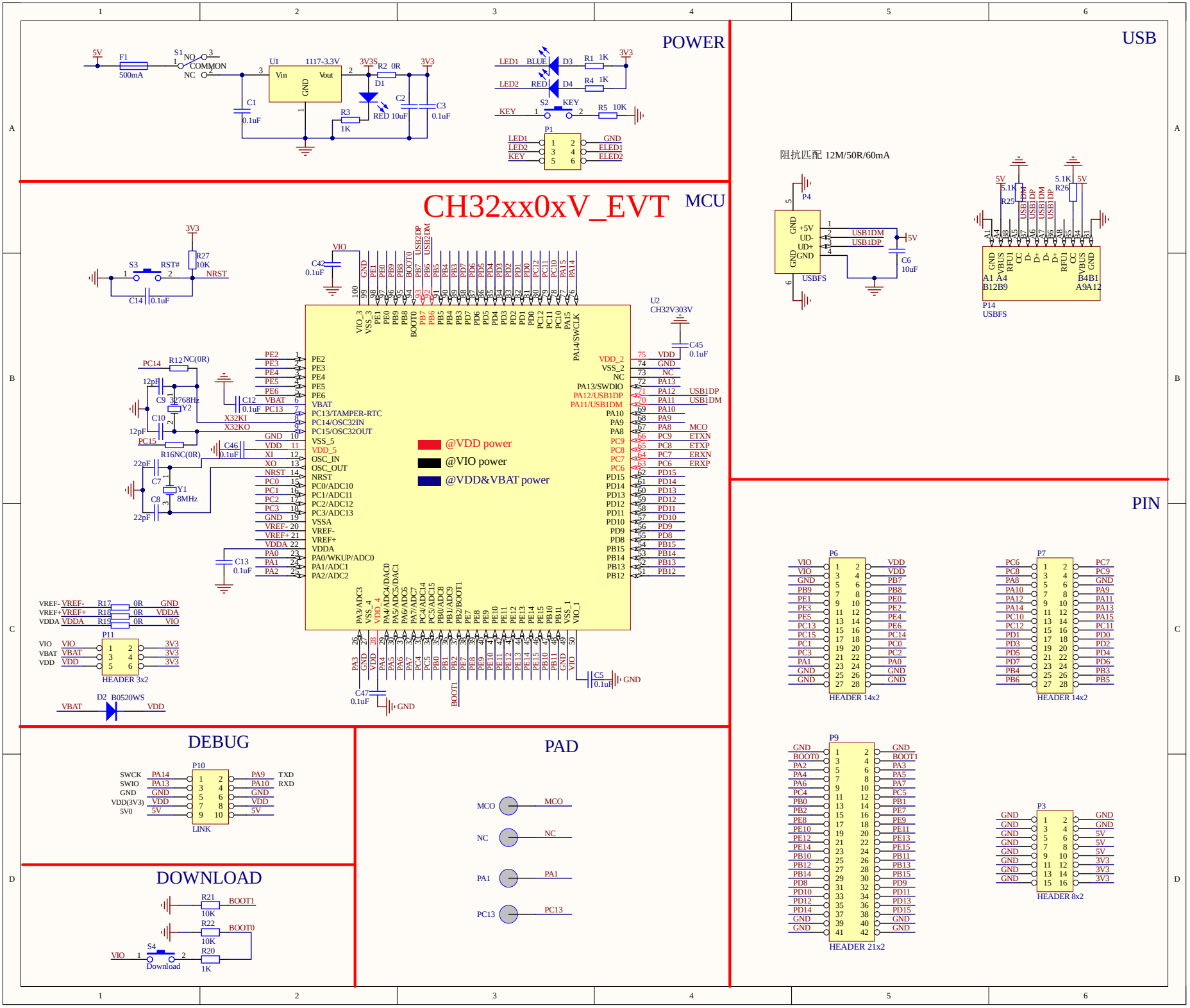
POWER
5V
F1
500mA
S1
NO
COMMON
NC
U1
1117-3.3V
Vin
Vout
GND
3V3S
R2 0R
3V3
D1
RED
C1
0.1uF
R3
1K
C2
10uF
C3
0.1uF
LED1
BLUE
D3
R1 1K
LED2
RED
D4
R4 1K
S2
KEY
R5 10K
P1
GND
ELED1
ELED2
USB
阻抗匹配 12M/50R/60mA
P4
+5V
UD-
UD+
USB1DM
USB1DP
C6
10uF
USBFS
5.1K
R25
R26
P14
USBFS
MCU
CH32xx0xV_EVT
U2
CH32V303V
C42
0.1uF
C45
0.1uF
S3
RST#
R27
10K
NRST
C14
0.1uF
PC14
R12 NC(0R)
12pF
C9
32768Hz
Y2
C10
12pF
PC15
R16NC(0R)
22pF
C7
Y1
8MHz
C8
22pF
C12
0.1uF
C46
0.1uF
C13
0.1uF
X32KI
X32KO
@VDD power
@VIO power
@VDD&VBAT power
C47
0.1uF
C5
0.1uF
GND
VREF-
VREF+
VDDA
R17
R18
R19
0R
VIO
VBAT
VDD
P11
3V3
HEADER 3x2
D2 B0520WS
PIN
P6
HEADER 14x2
P7
HEADER 14x2
P9
HEADER 21x2
P3
HEADER 8x2
DEBUG
P10
SWCK
SWIO
GND
VDD(3V3)
5V0
PA14
PA13
PA9
PA10
TXD
RXD
LINK
PAD
MCO
NC
PA1
PC13
DOWNLOAD
R21
10K
BOOT1
R22
10K
BOOT0
S4
Download
R20
1K

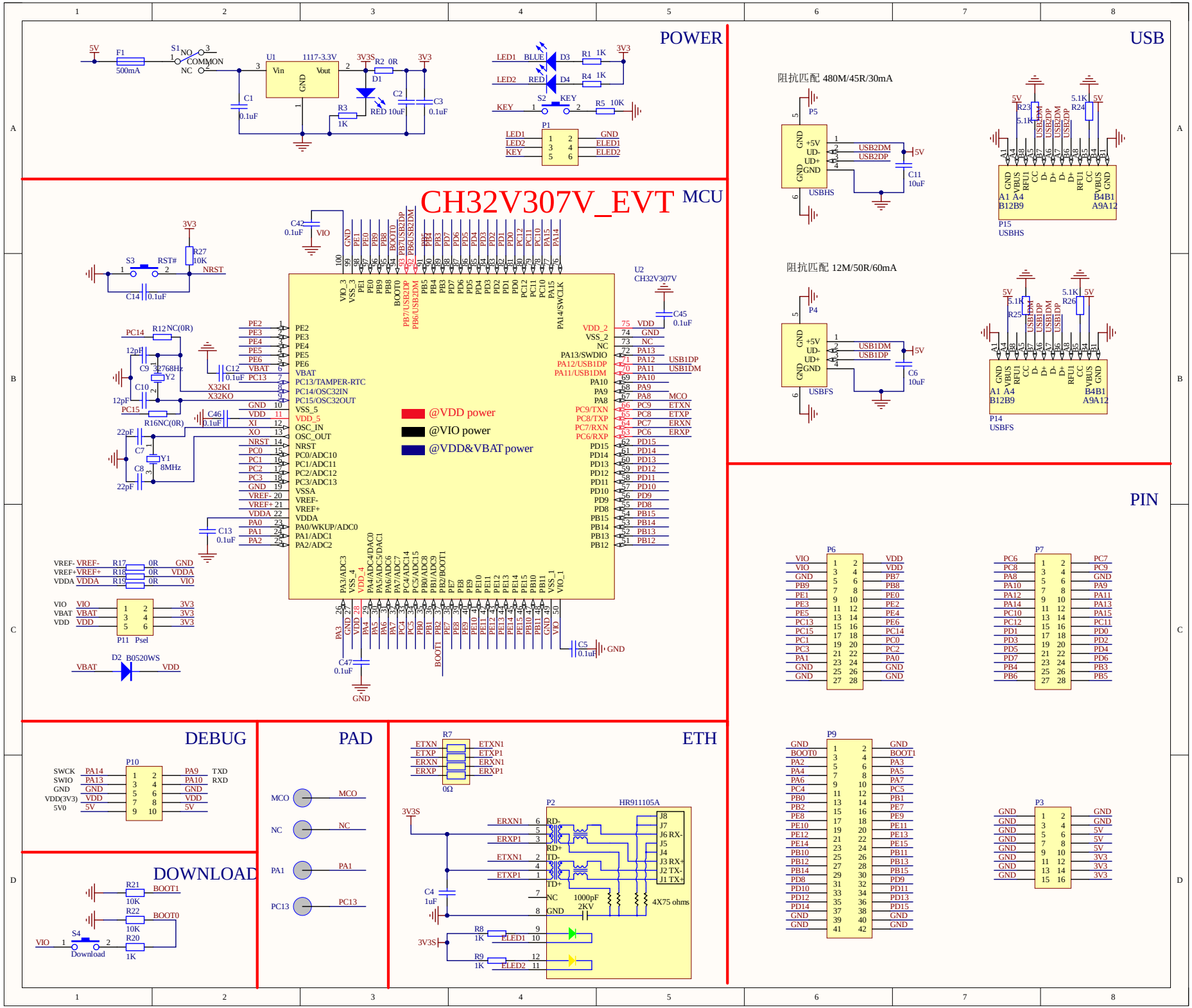
POWER
5V
F1
500mA
S1
NO
COMMON
NC
U1
1117-3.3V
Vin
Vout
GND
3V3S
R2 0R
3V3
D1
RED
C1
0.1uF
R3
1K
C2
10uF
C3
0.1uF
LED1
BLUE
D3
R1 1K
LED2
RED
D4
R4 1K
KEY
S2
KEY
R5 10K
P1
LED1
LED2
KEY
GND
ELED1
ELED2
USB
阻抗匹配 480M/45R/30mA
P5
+5V
UD-
UD+
GND
USBHS
USB2DM
USB2DP
C11
10uF
5V
R23
5.1K
R24
5.1K
GND
VBUS
RFU1
CC
D-
D+
D+
D-
RFU1
CC
VBUS
GND
A1 A4
B12B9
B4B1
A9A12
P15
USBHS
阻抗匹配 12M/50R/60mA
P4
USBFS
USB1DM
USB1DP
C6
10uF
R25
5.1K
R26
5.1K
P14
USBFS
MCU
CH32V307_EVT
U2
CH32V307V
C42
0.1uF
VIO
3V3
S3
RST#
R27
10K
NRST
C14
0.1uF
PC14
R12NC(0R)
12pF
C9
32768Hz
Y2
C10
12pF
PC15
R16NC(0R)
C12
0.1uF
X32KI
X32KO
C46
0.1uF
22pF
C7
Y1
8MHz
C8
22pF
C13
0.1uF
C45
0.1uF
@VDD power
@VIO power
@VDD&VBAT power
VREF-
VREF+
VDDA
R17 0R
R18 0R
R19 0R
GND
VDDA
VIO
VBAT
VDD
P11 Psel
3V3
D2 B0520WS
C47
0.1uF
C5
0.1uF
PIN
P6
P7
P9
P3
DEBUG
P10
SWCK
SWIO
GND
VDD(3V3)
5V0
PA14
PA13
VDD
5V
PA9
PA10
TXD
RXD
DOWNLOAD
R21
10K
BOOT1
R22
10K
BOOT0
S4
Download
R20
1K
PAD
MCO
NC
PA1
PC13
ETH
R7
ETXN
ETXP
ERXN
ERXP
ETXN1
ETXP1
ERXN1
ERXP1
0Ω
P2
HR911105A
3V3S
RD-
RD+
TD-
TD+
NC
GND
1000pF
2KV
4X75 ohms
C4
1uF
R8
1K
ELED1
R9
1K
ELED2

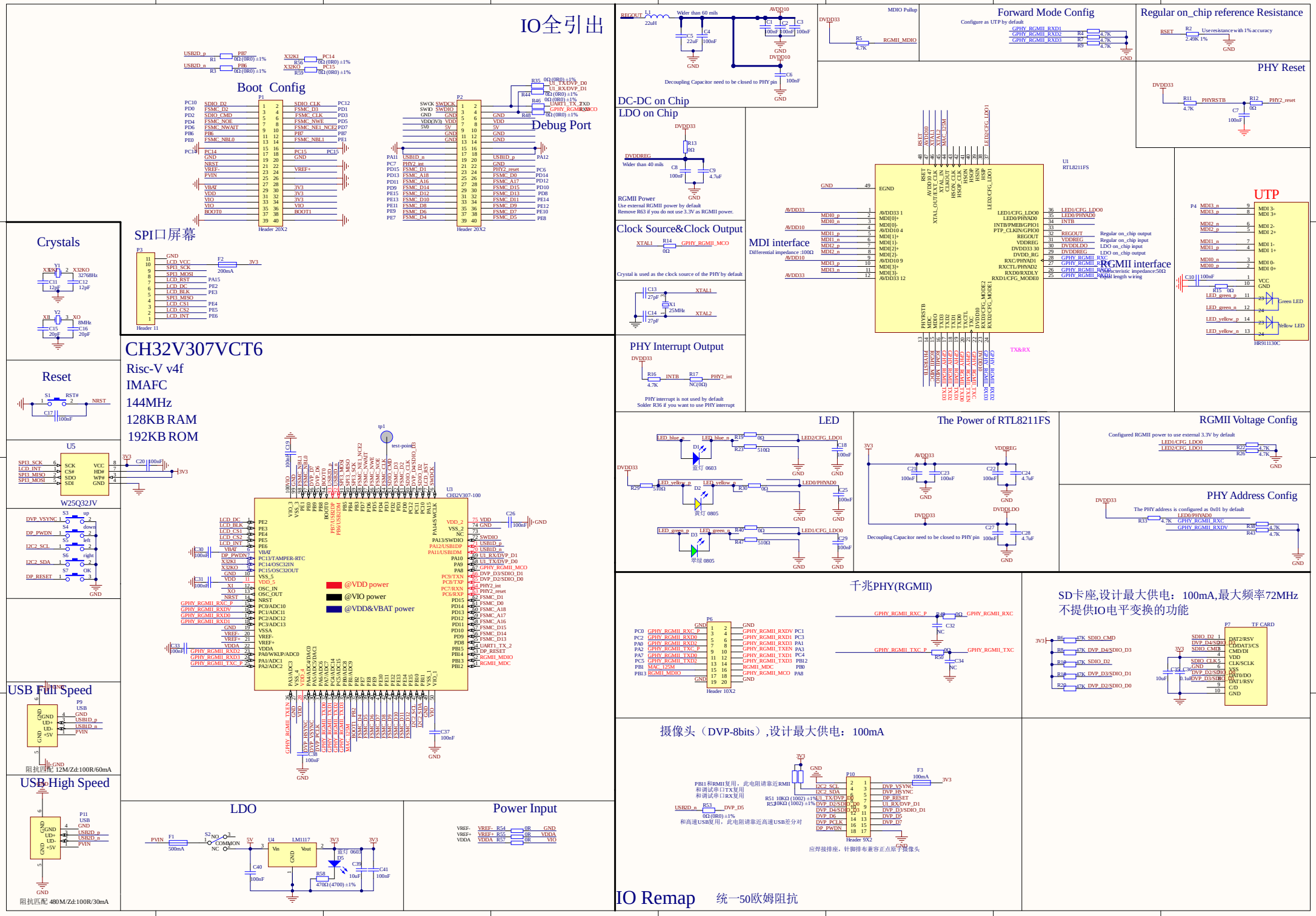
IO全引出
Boot Config
Debug Port
SPI口屏幕
Crystals
Reset
U5
W25Q32JV
CH32V307VCT6
Risc-V v4f
IMAFC
144MHz
128KB RAM
192KB ROM
@VDD power
@VIO power
@VDD&VBAT power
USB Full Speed
USB High Speed
阻抗匹配 12M/Zd:100R/60mA
阻抗匹配 480M/Zd:100R/30mA
LDO
Power Input
DC-DC on Chip
LDO on Chip
RGMII Power
Clock Source&Clock Output
PHY Interrupt Output
MDI interface
RGMII interface
Forward Mode Config
Regular on_chip reference Resistance
PHY Reset
UTP
LED
The Power of RTL8211FS
RGMII Voltage Config
PHY Address Config
千兆PHY(RGMII)
SD卡座,设计最大供电：100mA,最大频率72MHz
不提供IO电平变换的功能
摄像头（DVP-8bits）,设计最大供电：100mA
IO Remap
统一50欧姆阻抗

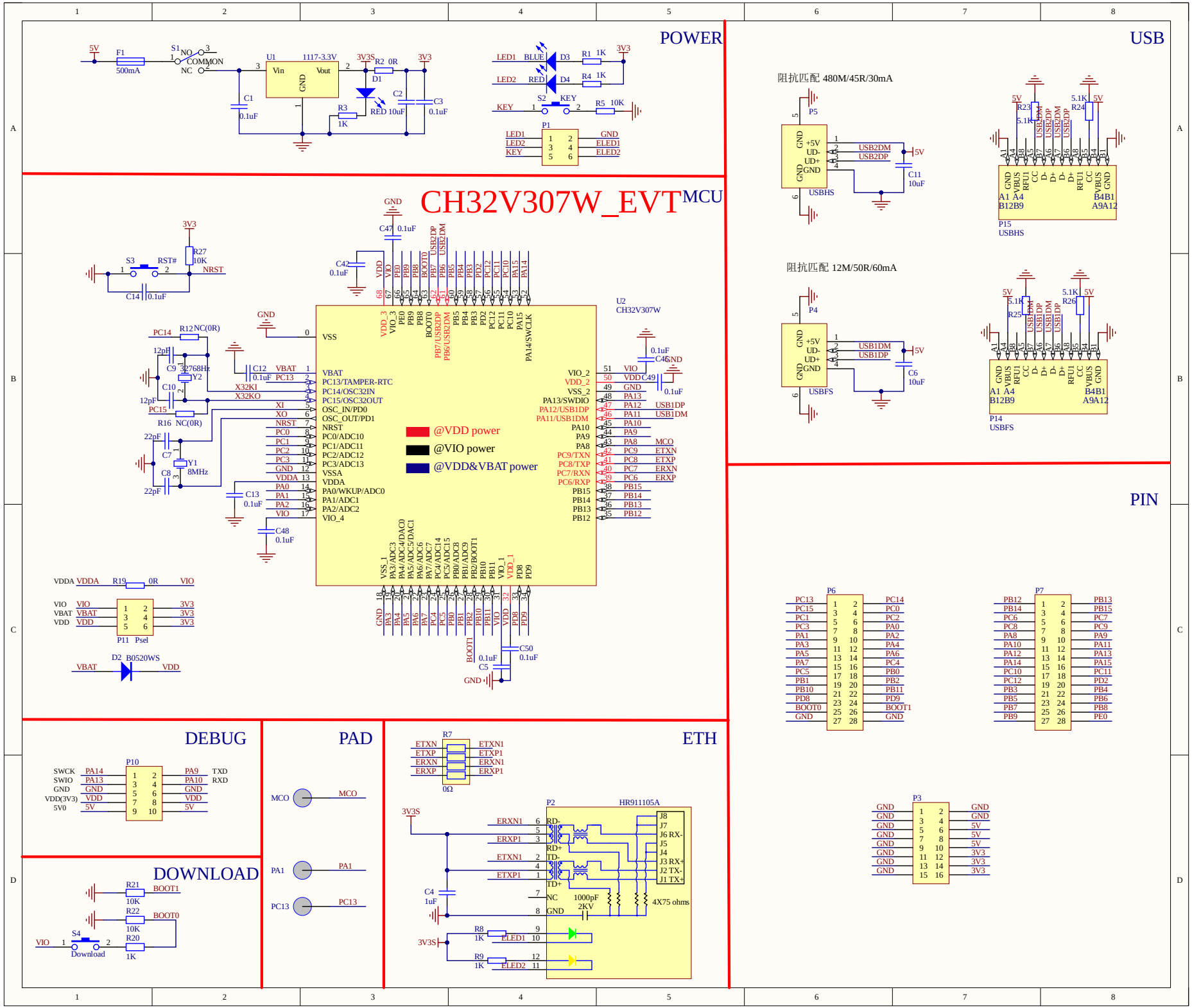
POWER
5V
F1
500mA
S1
NO
COMMON
NC
U1
1117-3.3V
Vin
Vout
GND
3V3S
R2 0R
3V3
D1
RED
C1
0.1uF
C2
10uF
C3
0.1uF
R3
1K
LED1 BLUE
D3
R1 1K
LED2 RED
D4
R4 1K
KEY
S2
KEY
R5 10K
P1
LED1
LED2
KEY
GND
ELED1
ELED2
USB
阻抗匹配 480M/45R/30mA
P5
GND
+5V
UD-
UD+
GND
USBHS
USB2DM
USB2DP
C11
10uF
R23
5.1K
R24
5.1K
P15
USBHS
阻抗匹配 12M/50R/60mA
P4
USBFS
USB1DM
USB1DP
C6
10uF
R25
5.1K
R26
5.1K
P14
USBFS
CH32V307W_EVT
MCU
U2
CH32V307W
S3
RST#
NRST
R27
10K
C14
0.1uF
C47
0.1uF
C42
0.1uF
PC14
R12 NC(0R)
12pF
C9
32768Hz
Y2
C10
12pF
PC15
R16 NC(0R)
22pF
C7
Y1
8MHz
C8
22pF
C12
0.1uF
VBAT
PC13
X32KI
X32KO
XI
XO
C13
0.1uF
C48
0.1uF
VSS
VBAT
PC13/TAMPER-RTC
PC14/OSC32IN
PC15/OSC32OUT
OSC_IN/PD0
OSC_OUT/PD1
NRST
PC0/ADC10
PC1/ADC11
PC2/ADC12
PC3/ADC13
VSSA
VDDA
PA0/WKUP/ADC0
PA1/ADC1
PA2/ADC2
VIO_4
@VDD power
@VIO power
@VDD&VBAT power
VIO_2
VDD_2
VSS_2
PA13/SWDIO
PA12/USB1DP
PA11/USB1DM
PA10
PA9
PA8
PC9/TXN
PC8/TXP
PC7/RXN
PC6/RXP
PB15
PB14
PB13
PB12
VIO
VDD
GND
PA13
PA12
PA11
PA10
PA9
PA8
PC9
PC8
PC7
PC6
PB15
PB14
PB13
PB12
MCO
ETXN
ETXP
ERXN
ERXP
VDDA VDDA R19 0R VIO
VIO VIO
VBAT VBAT
VDD VDD
P11 Psel
3V3
D2 B0520WS
VBAT
VDD
C50
0.1uF
C5
0.1uF
PIN
P6
P7
P3
DEBUG
P10
SWCK PA14
SWIO PA13
GND GND
VDD(3V3) VDD
5V0 5V
PA9 TXD
PA10 RXD
DOWNLOAD
R21
10K
BOOT1
R22
10K
BOOT0
S4
Download
R20
1K
PAD
MCO
PA1
PC13
ETH
R7
0Ω
ETXN1
ETXP1
ERXN1
ERXP1
P2
HR911105A
3V3S
RD-
RD+
TD-
TD+
NC
GND
1000pF
2KV
4X75 ohms
C4
1uF
R8
1K
ELED1
R9
1K
ELED2